The following paper was published in ASHRAE Transactions (Vol. #96, Part 2). Copyright 1990 American Society of Heating, Refrigerating and Air-Conditioning Engineers, Inc.

This posting is by permission of ASHRAE, and is presented for educational purposes only. ASHRAE does not endorse or recommend commercial products or services.

This article may not be copied and/or distributed electronically or in paper form without permission of ASHRAE. Contact ASHRAE at ***www.ashrae.org.***

AN OVERVIEW OF U.S. GEOTHERMAL DISTRICT HEATING SYSTEMS

K.D. Rafferty, P.E.
Associate Member ASHRAE

ABSTRACT

This paper presents an introduction to the overall design and operating characteristics of U.S. geothermal district heating systems. Geothermal resources and district system components including production facilities, central plants, distribution, customer connections, metering, and disposal are covered. The current extent and prospects for future development of geothermal district heating systems are discussed.

Much of the information included in this paper was developed as part of a materials and equipment review conducted in 1988-89 of 13 of the largest geothermal district systems.

INTRODUCTION

The design of most U.S. geothermal district heating systems can be divided into five or six subsystems. These subsystems include: production facilities, central plants (closed-distribution systems only), distribution, customer connections, metering, and disposal. With the exception of certain materials considerations, the areas of distribution, customer connections, metering, and central plants in geothermal systems are quite similar to their conventionally fueled counterparts. It is the production facilities and disposal subsystems that tend to set geothermal systems apart from district heating in general.

Since all current geothermal district systems operate in conjunction with low-temperature resources, hot water, rather than steam, is the heat transfer medium in all cases. The geothermal fluid is generally pumped from the system's production well or wells. Depending upon the design of the distribution system, the fluid is delivered to a central heat exchange plant (closed distribution) or directly to the customer through an "open" type of distribution network. Most current systems employ the open (no central heat exchanger plant) design. Under this approach, heat exchange takes place at the individual customers' connections. A typical open-type system appears in Figure 1. Figure 2 illustrates the closed-system design.

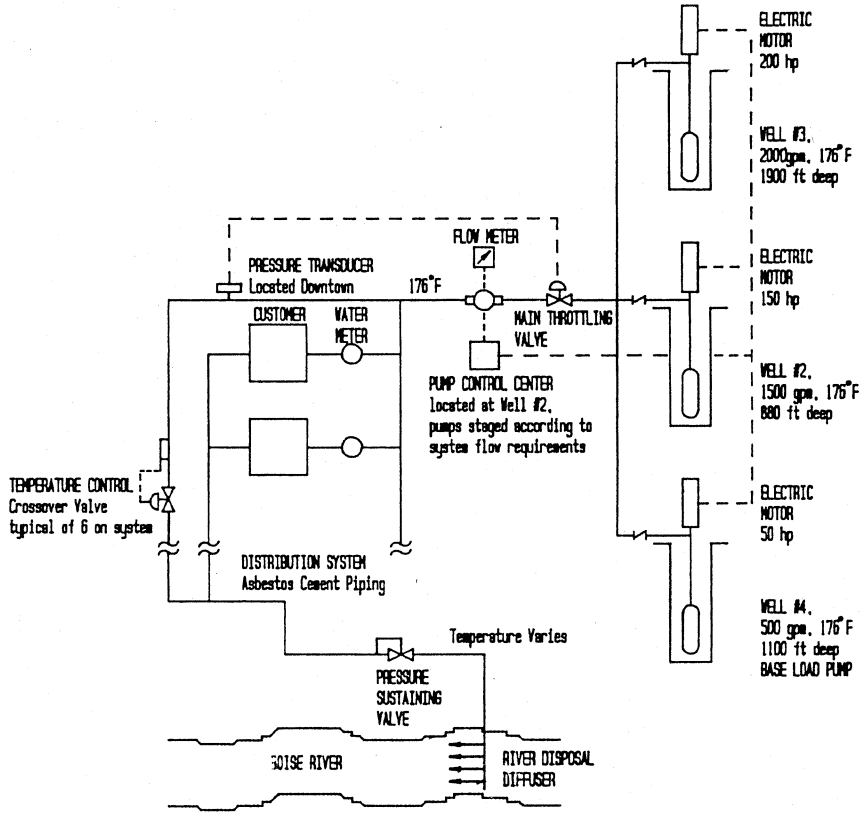

Figure 1 *Geothermal district heating system–open distribution*

Kevin D. Rafferty is a Research Associate at the Geo-Heat Center, Oregon Institute of Technology, Klamath Falls.

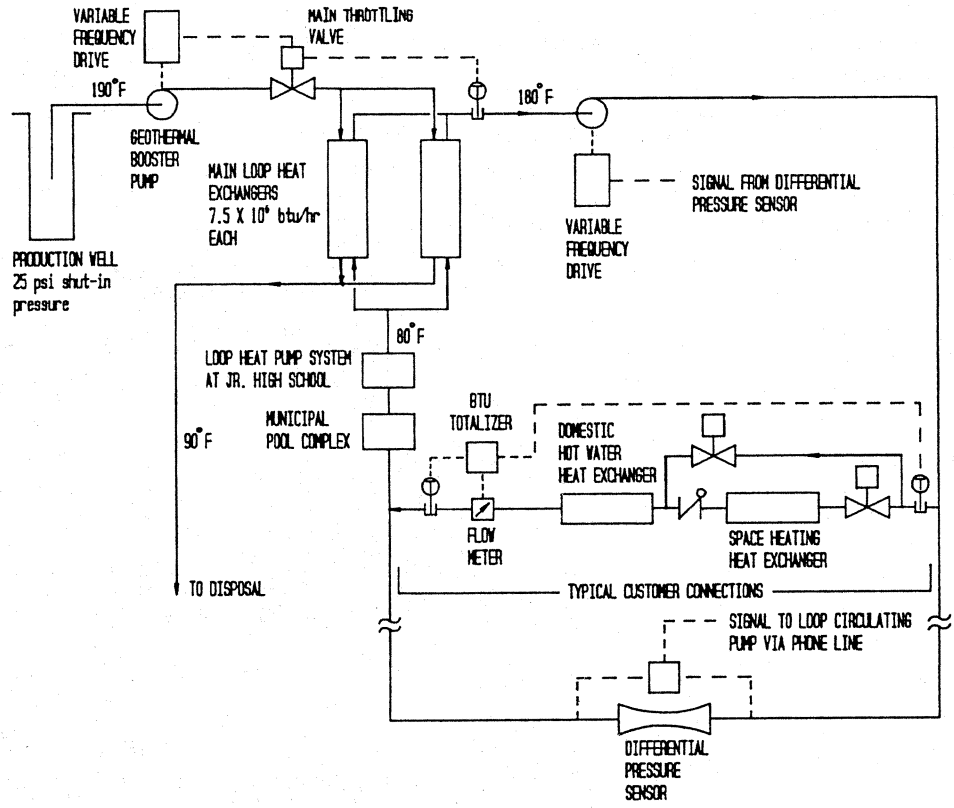

Figure 2 *Geothermal district heating system–closed distribution*

Disposal can be a significant part of the design of a geothermal system. Because the heat source is warm groundwater, the system is by nature a "once through" design. As a result, large quantities of fluid must be disposed of to accommodate system operation. Two approaches to this disposal are currently in use: surface disposal and injection wells.

Most systems employ the less expensive surface disposal. Regulatory pressure and increasing development, however, suggest the likelihood of injection playing a larger role in the future.

EXTENT OF GEOTHERMAL DISTRICT HEATING DEVELOPMENT

As with most other geothermal developments, district heating projects are located primarily in the western U.S. There are currently 18 such systems in operation and at least 3 in some stage of development. The locations of these systems appear in Figure 3. Table 1 presents key information on several systems now in operation. As indicated, these systems vary significantly in terms of resource temperature, installed piping length, and flow capability.

Most geothermal district heating development has occurred since the late 1970s, with approximately 90% of current systems seeing start-up in this period. There are, however, important exceptions to this. The Boise Warm Springs Water District, located in Boise, Idaho, began operation in the 1890s and the system serving the Oregon Institute of Technology campus was constructed in 1963.

Many of the newer district systems were developed with federal government (U.S. DOE) assistance in the early 1980s.

GEOTHERMAL RESOURCES

Geothermal energy is heat derived from the earth's interior. There are several sources for this heat, but two are thought to be most important:

1. Heat released throughout the earth's history by decay of radioactive isotopes.
2. Heat released during formation of the earth by gravitational acceleration and during subsequent mass redistribution when heavier material sank into the earth's core.

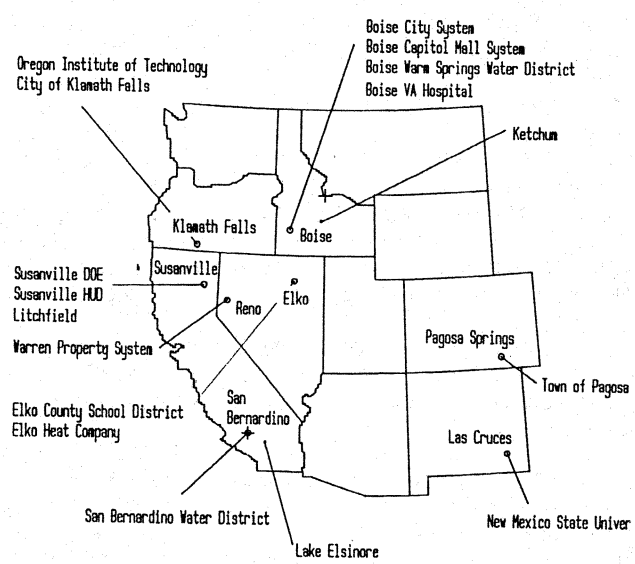

Figure 3 *Locations of selected operating geothermal district heating systems*

TABLE 1
Information Summary on Selected U.S. Geothermal District Heating Systems (Rafferty 1989)

System and Location	Years Operated	Resource Temp.	Peak Flow	Feet of Pipe
Oregon Institute of Technology Klamath Falls, OR	27	192°F	980	7300
Klamath Falls City Klamath Falls, OR	6	218°F	1000	14,000
Susanville, DOE Susanville, CA	6	174°F	700	19,000
Susanville, HUD Susanville, CA	5	155°F	300	10,000
San Bernardino Water District San Bernardino, CA	6	138°F	3700	35,000
Pagosa Springs Pagosa Springs, CO	7	140°F	600	15,000
New Mexico State University Las Cruces, NM	7	142°F	230	N/A
Boise City Boise, ID	6	170°F	4000	37,000
Boise Warm Springs Water District Boise, ID	100 +	176°F	1600	11,300
Boise Capital Mall Boise, ID	7	169°F	750	6000
Elko County School District Elko, NV	3	190°F	290	11,300
Elko Heat Company Elko, NV	7	170°F	650	15,500
Warren Property Reno, NV	7	210°F	710	26,500

The relative contribution of these two sources is not firmly established (Wright and Culver 1989).

Due to the elevated temperature in the interior, heat constantly flows toward the surface of the earth. White (1965) estimates the total thermal energy (above the surface temperature) contained in the earth's crust to a depth of 6 miles as equivalent to 2.3×10^{17} barrels of oil. Of course, only a small portion of this energy is recoverable economically (Wright and Culver 1989).

Geothermal resources are generally characterized according to Table 2. Temperatures associated with those resources vary widely from less than 100°F to as high as 650°F. For convenience, geothermal temperatures are divided among three ranges, as indicated in Table 3.

To date, the most widely used resource type, which is employed by all geothermal district heating systems, is the hot-water-dominated hydrothermal convection system. In this system, groundwater circulates deep into the earth to zones of elevated temperatures. The density difference between the heated water and cooler surface water drives the fluid back toward the surface, creating a convection system. In most low-temperature resources, this density difference is not sufficient to cause the wells to self-flow. However, water levels do rise well above the zone of elevated temperature. Vapor (steam) dominated convection systems are quite rare and when they occur are generally applied to electric power generation.

Sedimentary basin resources are employed to some extent in the northern west central U.S. This type of resource also exists in the eastern U.S. but has not been extensively developed.

Geo-pressured resources are found in the Gulf Coast area of the U.S., and although these resources have not been developed commercially, they offer interesting potential. Geo-pressured wells produce fluids of elevated temperature at higher pressure (several thousand psi) and contain significant quantities of dissolved methane.

Radiogenic resources have not been developed to date. This type of resource exists in the eastern U.S., where heat

TABLE 2
Geological Classification of Geothermal Resources (Wright 1989)

Resource Type	Temperature Range (°F)
Convective hydrothermal resources:	
Vapor dominated	464
Hot water dominated	86 to 662
Other hydrothermal resources:	
Sedimentary basin/regional aquifers (hot fluid in sedimentary rocks)	86 to 302
Geopressured (hot fluid under pressure that is greater than hydrostatic)	194 to 392
Radiogenic (heat generated by radioactive decay)	86 to 302
Hot rock resources:	
Part still molten (magma)	1112
Solidified (hot, dry rock)	194 to 1202

Sedimentary basin resources are employed to some extent in the northern west central U.S. This type of resource also exists in the eastern U.S. but has not been extensively developed.

TABLE 3
Classification of Geothermal Resources by Temperature

Low Temperature	< 90°C (194°F)
Moderate Temperature	90°C-150°C (194°F-302°F)
High Temperature	> 150°C (302°F)

is generated by decay of isotopes typically contained in granite rocks.

Much research is being conducted in hot dry rock resources. These resources are characterized by geologic bodies of elevated temperatures that are devoid of fluid to transport the heat. If an economical means of exploiting this resource can be developed, many areas of the country could benefit.

Geothermal fluids, due to their elevated temperatures and circuitous flow paths, tend to become laden with dissolved solids and to some extent gases. Most direct-use fluids are of total dissolved solids (TDS) content of 3000 pounds per minute (lbm) or less; however, a few contain several times this amount. In addition, most fluids contain some hydrogen sulphide (H_2S), and some fluids contain carbon dioxide (CO_2) and ammonia (NH_4).

These constituents tend to cause the fluids to be destructive of many standard materials of construction. As a result, materials selection for any geothermal system is an important component of the design process.

PRODUCTION FACILITIES

There is great variation in the depth and temperature of production wells employed for geothermal district heating systems. Depth ranges from only 275 feet at Pagosa Springs to 3030 feet at a mall in Boise. Temperatures of 138°F to 218°F are employed. With one exception, all of the projects employ pumps to produce the geothermal fluid. Several systems previously were able to operate for some of the year on the artesian head generated by the well. At present, however, only three systems have this capability.

Production wells for geothermal systems are very similar to those constructed for irrigation and domestic water supply. Figure 4 presents a cross section of a typical well.

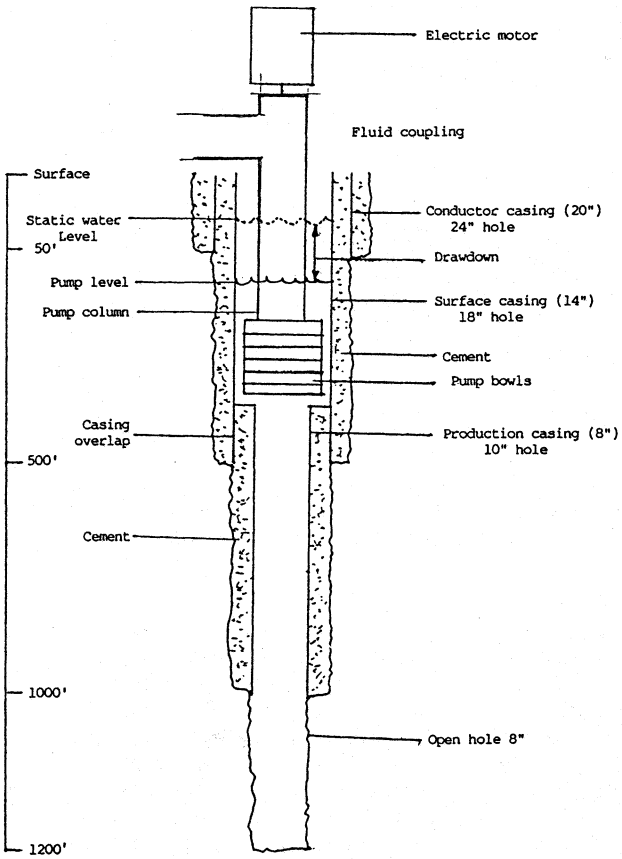

Figure 4 *Typical geothermal well construction details*

The physical size of the well casing is a function of the production rate (in the lower portion of the well) and the pump size (in the upper portion of the well). It is important to determine early in the design of the well, the diameter of the pump to be installed in order to allow for an adequately sized casing.

Many geothermal wells are completed in hard rock formations often associated with geothermal aquifers. These formations are frequently competent enough to allow "open hole" (no casing in the production area) completion of the well. For less competent formations, slotted casings or well screens are installed to admit the hot water to the well and filter out formation debris. Each state has its own regulations governing the details of well construction in such areas as surface casing and cementing requirements.

Pumps are required in most cases to bring the geothermal fluid to the surface. Due to the fact that water levels in the wells are generally greater than 30 feet below the surface and of elevated temperatures, it is necessary to place the pump in the well. Two types of pumps are available for this application: lineshaft and submersible. Of these, the lineshaft variety is the type generally chosen for geothermal duty.

Lineshaft pumps are available in two different designs: open and enclosed. In the open type, the bearings supporting the lineshaft are lubricated by the fluid flowing up the column. For this reason, it is important to select bearing materials that are compatible with the fluid's chemistry and temperature. Many fluids contain hydrogen sulphide (H_2S). This gas is very harsh toward copper and copper alloys, so bronze bearings should be used with caution. Elastomeric (rubber) bearings, when used, should be verified for temperature suitability. Experience has shown that water-lubricated (open lineshaft) pumps have performed best in wells with higher static water levels or artesian conditions. These conditions tend to keep most or all of the shaft bearings in a "wet" condition at all times.

Enclosed lineshaft pumps include a shaft-enclosing tube to isolate the lineshaft and bearings from exposure to the pumped fluid. In addition, the bearings in such pumps are generally lubricated with an oil rather than water. This type of pump has been demonstrated to be the most reliable in geothermal applications.

Enclosed lineshaft pumps, as with any other type of downhole pump, are set into the well at some distance below the static water level. This distance allows for sufficient suction head for the pump and for drawdown. Drawdown is the distance the static water level changes under pumping conditions. Total head on the pump is composed of static water level plus drawdown plus column friction plus surface pressure requirements.

In some applications, it is necessary to specify special construction of the pump to allow for expansion of the shaft. Because of the length of the shaft and the fact that it operates at elevated temperatures, a substantial amount of expansion takes place at start-up. In order to accommodate this expansion, "extra lateral" pump bowls are employed. These bowls (impeller housings) are specially cast with extra clearance to allow for the shaft expansion.

Lineshaft-type pumps are limited by mechanical and cost considerations to maximum setting depths of approximately 800 to 1000 feet, although this has rarely influenced their selection for geothermal district heating systems.

For depth requirements exceeding the capabilities of the lineshaft pump, submersible pumps can be employed. Because the driving motor is submersed in the well along with the pump bowls, there is no drive shaft–hence, no mechanical limitations of the type incurred by lineshaft pumps. The major limitation of submersible pumps and the reason for their lack of success in geothermal applications is the location of the electric motor in the hot geothermal environment. This results in a service life too short for economical application in most direct-use systems.

Many production well pumps are equipped with variable-speed drives to regulate the pump's output. Electronic variable-frequency drives and fluid couplings are the most frequently applied. The electronic controls are the more efficient of the two types. Although they offer greater energy efficiency, their complexity has presented a service problem in some cases. Fluid couplings are an older, less sophisticated technology; however, they are generally an item that can be serviced by local pump contractors. This is an important consideration, since many of the operating geothermal district heating systems are located in small towns where technical services are not widely available.

The efficiency of the fluid coupling is a function of the ratio between the input (motor rpm) and the output speed. Because much of the total head on a geothermal pump is static head, the amount of turndown at the pump is limited by the necessity to lift the geothermal fluid out of the well. This minimum head requirement places a minimum speed on the pump. As a result, fluid-coupling efficiency in most applications is maintained in the upper portion of the range.

Fuel costs for geothermal systems consist only of the electrical costs for operating the production well pumps. The unit cost of pumping is a function of the pump efficiency, total head, system Δt, and local utility rates. This value varies, but for most systems it is in the range of \$0.10 to \$0.35 per million Btu. Of course, when considering capitalization of the pumps themselves, well costs, and maintenance, this figure is considerably larger.

The remaining components in the production facilities of a geothermal system consist mainly of electrical apparatus

and controls. These components are similar to those found in conventional systems.

CENTRAL PLANTS

Central plants are included in approximately 40% of geothermal district heating systems. Because the wells are the heat source for the system, a plant is not required unless central heat exchangers (and a closed distribution system) are employed. Central plants contain the system's heat exchangers, circulating pumps, fluid expansion compensation, and controls.

In all cases, plate-and-frame-type heat exchangers are employed. This type of heat exchanger is particularly well suited to geothermal service for a number of reasons, including cleanability, expandability, compact design, construction materials, and thermal performance. Thermal performance is particularly important, since the temperature of a particular geothermal resource is fixed, generally at a lower value than that at which conventional heating systems are operated. Therefore, it is necessary to minimize temperature loss between the resource and the customer. By operating economically with approach temperatures as low as 5°, the plate heat exchanger fits the application well. Most exchangers in district heating duty employ 316 SS plates and medium nitrile gaskets.

Some of the existing systems have encountered difficulty with controls. In most cases, this occurred early in the operation of the system and was traceable to oversizing of control valves. Most systems were designed to handle peak loads far in excess of those needed by the initial customer base. As a result, control valves in some cases were attempting to regulate flow rates of as little as 5% to 10% of design. The lack of control stability that resulted typically manifested itself in pressure surges. Through a combination of growth in customer base and use of manual controls, most of these problems have been successfully addressed. It is important in future designs to allow for stable automatic control at low load in geothermal district systems.

Circulating pumps, expansion compensation equipment, and most controls in geothermal district systems are located on the loop side of the heat exchanger. As such, they are no different than those employed in conventional systems.

DISTRIBUTION

As indicated in the previous section, geothermal district heating distribution methods can be divided into two groups: open and closed. Open distribution systems deliver the geothermal fluid from the well directly to the customer through the distribution system. Closed networks, on the other hand, deliver the fluid to a central plant where it is heat exchanged and a closed loop delivers the heat to individual customers. These two approaches are illustrated in Figures 1 and 2.

The type of piping employed in a distribution system is influenced by the nature of the design (open or closed). In the open system, the piping is exposed to the geothermal fluid and primarily nonmetallic piping is used. In closed systems, exposure is not a consideration and metallic piping is more common. In addition, closed systems tend to use pre-insulated piping for all buried pipe (supply and return). Open systems generally insulate only the supply piping; return (or disposal) piping is uninsulated. Figure 5 provides a breakdown of all piping greater than the 2-inch nominal size used in geothermal systems in the district heating systems surveyed. This figure and the following ones were based upon a recent survey of 13 geothermal district heating systems (Rafferty 1989). The total quantity of pipe included in the survey was approximately 260,000 lf.

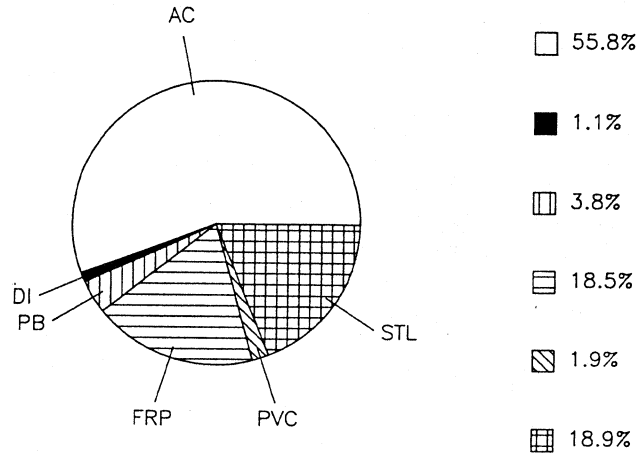

Figure 5 *Distribution of existing installed piping by type in geothermal district systems*

As indicated, asbestos cement is clearly the most popular material in these systems with 56% of the total. This piping combines a number of factors that have caused it to be the material of choice: low cost, ease of installation, temperature and chemical compatibility with geothermal fluid, and inherent allowance for thermal expansion. The lack of availability of this piping for future projects makes identification of a new product to take its place an important issue for the geothermal community.

Figure 6 presents a breakdown of the relative quantity of piping used in open and closed distribution systems. As indicated, most piping is used in open distribution systems and thereby exposed to the geothermal fluid.

Figures 7 and 8 provide an indication of the type of piping used in open and closed geothermal systems. Obviously, nonmetallic piping is the choice for open systems, with steel and ductile iron pipe constituting only 15.5% of the total. The reverse is true in closed distribution systems, where steel piping dominates with nearly half of all the installed length.

Most piping in geothermal systems is directly buried in the soil and is of pre-insulated design. The exact combination of materials varies, but most employ foamed-in-place polyenthane insulation with a value of .14 to .18 Btu•in./h•ft^2•°F. Jacketing materials of asbestos cement (for asbestos cement carrier pipe systems only), PVC, and polyethylene are in use.

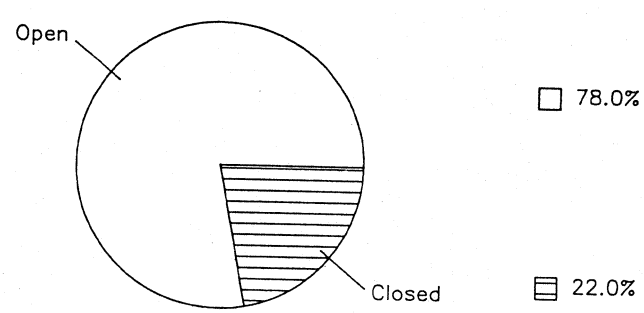

Figure 6 *Distribution by system type of piping used in geothermal district heating systems*

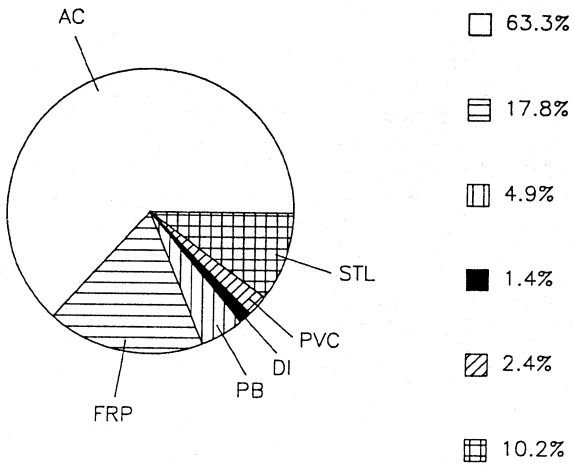

Figure 7 *Distribution of piping by type used in open geothermal distribution systems*

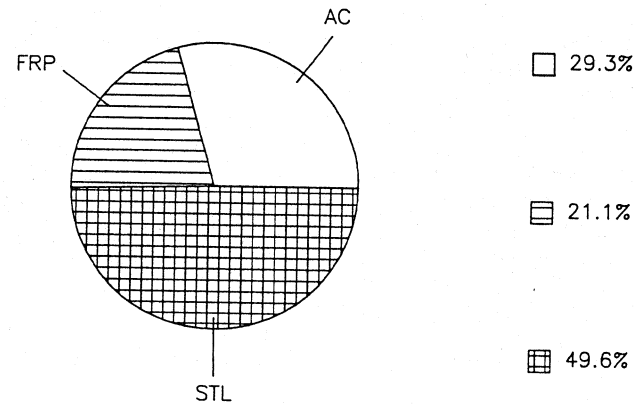

Figure 8 *Distribution of piping by type used in closed geothermal distribution systems*

Isolation valves for these systems are split between gate and butterfly types. Experience has demonstrated that the butterfly variety is generally better suited to geothermal service than the gate valve. Butterfly valves are less susceptible to stem leakage, which in gate valves tends to cause corrosion of the stem and seizure. Butterfly valves are available in materials (316 SS and EPDM) that are resistant to most geothermal fluids and not excessively costly.

CUSTOMER CONNECTIONS/METERING

Customer connections are the physical link between the customer and the district network. The connection includes such items as branch lines, heat exchangers, metering, controls, and shutoff valves. The quantity of equipment involved and the degree to which it is the responsibility of the customer or district varies widely.

The two components of greatest interest in the customer connection are the heat exchanger (open distribution system only) and the metering.

Plate heat exchangers are used almost exclusively by geothermal district heating systems for customer interface. Materials are as described earlier, generally 316 steel plates and medium nitrile rubber gaskets.

Metering for geothermal systems falls into one of two categories: energy or volume. Energy metering is considerably more complex and has yielded mixed results. Volume metering, a much simpler approach, has been quite successful for geothermal systems.

Open-type geothermal systems (those delivering the geothermal fluid directly to the customer) lend themselves well to volume metering. In this approach, only the volume of water used is measured–thus reducing metering complexity. The rate for the geothermal heat is based on some measure of volume (gallons, square feet, etc.) and an assumed Δt. The assumed Δt is fixed at some value that is reasonable for the building stock served. The volume-metering approach places the responsibility for achieving a high Δt on the customer. If one designs and operates the system at a Δt higher than that assumed in the rate base, one is able to "beat the system" or purchase energy more economically. A high Δt also benefits the district by reducing the gallons pumped per unit of energy sold.

Energy metering is used in approximately 60% of geothermal district heating systems. Results have been mixed with regard to successful use of this technique. In all cases, problems have developed that have been related to the performance of the equipment rather than fluid chemistry/corrosion issues. These have included early failure of the batteries in battery-operated meters and moisture-induced failure of meter components due to location (underground vaults). An additional problem, common to many systems in both volume and energy metering, is contractor oversizing of flowmeters. It is important for the district to involve itself in meter sizing to ensure accurate output.

DISPOSAL

Disposal is one of the major issues that distinguishes geothermal district heating systems from their conventionally fueled counterparts. Because of their heat source, geothermal systems are characterized by a large throughput of warm groundwater. Once the heat is extracted from the groundwater, it must be disposed of. In general, two methods are in use for this: surface disposal and injection.

Surface disposal consists of discharging the water to some surface feature, such as rivers, lakes, or percolation ponds. It is considerably less expensive than injection, but it can lead to problems if a large number of users on the same resource employ the method. In two areas of the country where significant development has taken place (Boise, ID, and Klamath Falls, OR), extensive use of surface disposal has resulted in measurable declines in the geothermal aquifer. In Boise, many wells that previously flowed artesian no longer do so. As a result of these events and in the interest of resource conservation, many jurisdictions now favor injection as the accepted method of disposal. Surface disposal can also be limited by environmental considerations. Geothermal fluids generally contain elevated levels of chemical species relative to surface water, which can include hydrogen sulphide, boron, fluoride, and in some cases radioactive species. The rate at which fluids containing such constituents can be discharged to surface water is limited by the EPA and state environmental regulatory agencies. In addition to the chemical considerations, thermal pollution may also be a consideration.

Injection is now practiced by 30% of the systems surveyed. Another 30% are in the construction or final planning stages of injection. In all cases, those systems planning injection are doing so in reaction to aquifer declines, regulatory pressures, or both.

Completion of a successful injection well is more challenging than the same procedure for a production well. Most regulatory agencies require that the fluid be returned to an aquifer of the same or poorer quality. This can mean that the injection well must be at least as deep as the

production well for the system, thus incurring substantial expense. In addition, some states place maximum limits upon allowable injection pressure, which can make it difficult or impossible to compensate for poor drilling or completion techniques with increased injection pressure.

Costs of injection wells are generally higher than for production wells on the same system. This arises from the increased geological and hydrological consulting services required. These services are typically employed in siting the well to help ensure that once in operation, the injected fluid does not simply "short circuit" to the production well. In addition, drilling techniques for injection must be more precise in order to accurately identify the geology of the well and to prevent damage to a potential receiving aquifer.

FUTURE PROSPECTS

Future prospects for the development of geothermal district heating systems are quite encouraging. By nature, operation of such systems displaces the use of conventional fuels and eliminates production of "greenhouse" gases such as CO_2.

In addition, the geographical extent of geothermal resources is quite significant. One study (Allen 1980) identified a total of 373 western cities within 5 miles of at least one hydrothermal site. Research has recently begun to refine these data.

California currently leads the nation in the development of new geothermal district heating systems. Using royalty funds from the operation of existing geothermal power plants, the state provides funding for feasibility studies and construction of new systems.

At present, the most likely areas for development are those states with known geothermal resources and a deregulated institutional setting for district heating development. This would include the states of Oregon, Washington, and California.

REFERENCES

Allen, E.A. 1980. *Assessment of the geothermal potential within the BPA marketing area*. Department of Energy, Bonneville Power Administration, Portland, OR, July.

Rafferty, K. 1989. *A materials and equipment review of selected geothermal district heating systems*. Geo-Heat Center, Oregon Institute of Technology, Klamath Falls.

White, D.E. 1965. "Geothermal energy." U.S. Geological Survey–Circular 519.

Wright, P.M., and G.G. Culver. 1989. "Nature of geothermal resources." Chapter 3, *Geothermal Direct Use Engineering and Design Guidebook*. Geo-Heat Center, Oregon Institute of Technology, Klamath Falls.

DISCUSSION

Vic Dilloway, Director of Operations, Pacific Energy, Commerce, CA: Under what pressures are the geothermal heating distribution systems operated?

K.D. Rafferty: Typically less than 60 psi.

Tim M. Tierney, Director of Marketing, St. Louis Thermal Energy Corp., St. Louis, MO: This was a very well-organized and well-presented paper on a subject that is timely and important. While the applications are regional, I'm glad I had an opportunity to sit in and learn about this topic.

Rafferty: Thank you.